	PART DESCRIPTION	MATERIAL
①	SM1RR	ANODIZED ALUMINUM
②	AD254-200-B	N-LAK22/N-SF10
③	SM1L12-A	ANODIZED ALUMINUM

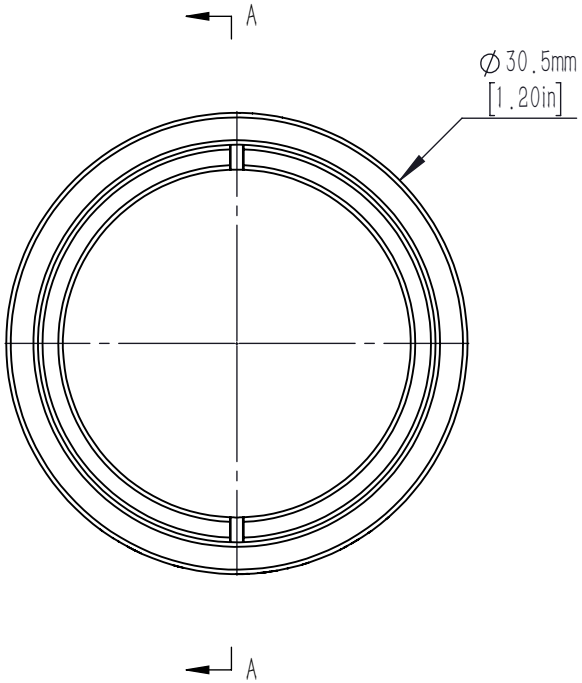

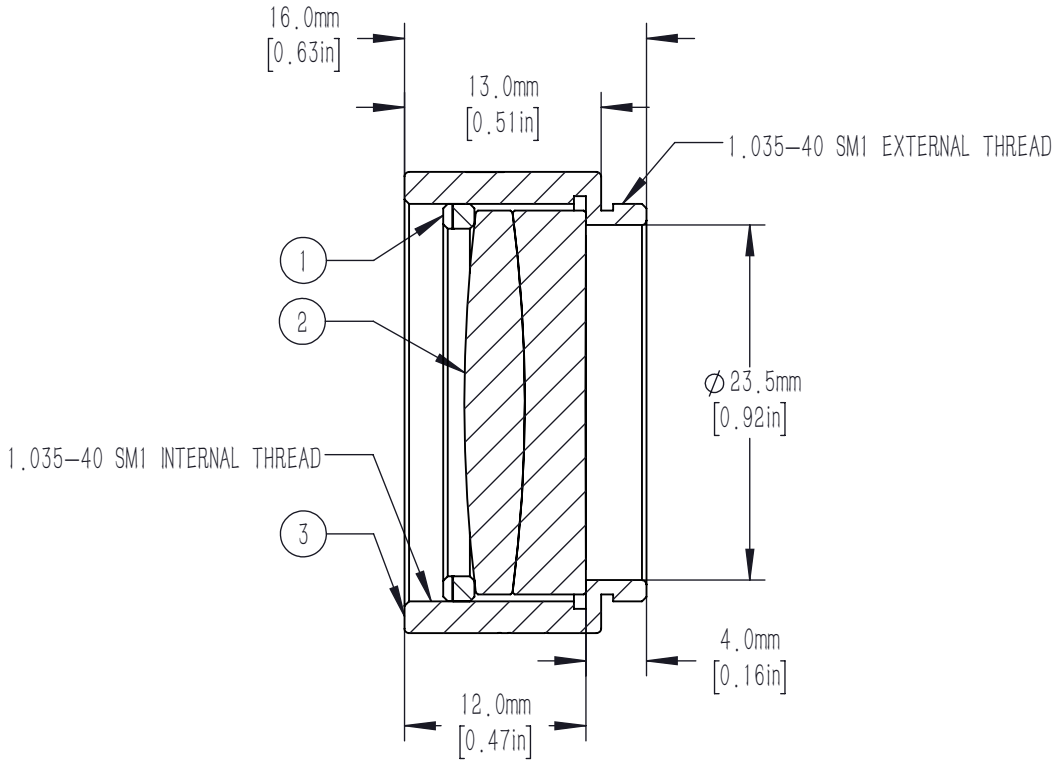

NOTES/SPECIFICATIONS:

1. DESIGN WAVELENGTHS: 706.5nm, 855nm, AND 1015nm
2. FOCAL LENGTH: 200.0mm ±1%
3. BACK FOCAL LENGTH (REF): 194.8mm
4. LENS DIAMETER: 25.4mm +0.00/-0.10mm
5. LENS CENTER THICKNESS: 8.0mm
6. CLEAR APERTURE: >90% OF LENS DIAMETER
7. SURFACE QUALITY: 40-20 SCRATCH-DIG
8. CENTRATION: <3 arcmin
9. COATING: BBAR Ravg <0.5% FROM 650-1050nm
   0° AOI, ON BOTH OPTICAL SURFACES

FOR INFORMATION ONLY NOT FOR
MANUFACTURING PURPOSES

DRAWING PROJECTION			睿创光科 RCOPTICS			
	NAME	DATE	Mounted D25.4mm, F=200mm, Near IR Achromat, B Coated			
DRAWN	CWD	2022/5/18	AD254-200-B-ML			
APPROVAL	ZSB	2022/5/18	MATERIAL	WEIGHT	SCALE	REV
FOR INFORMATION ONLYNOT FOR MANUFACTURING PURPOSES			N/A		2:1	A