	MATERIAL
①	N-BK7
②	N-SF5

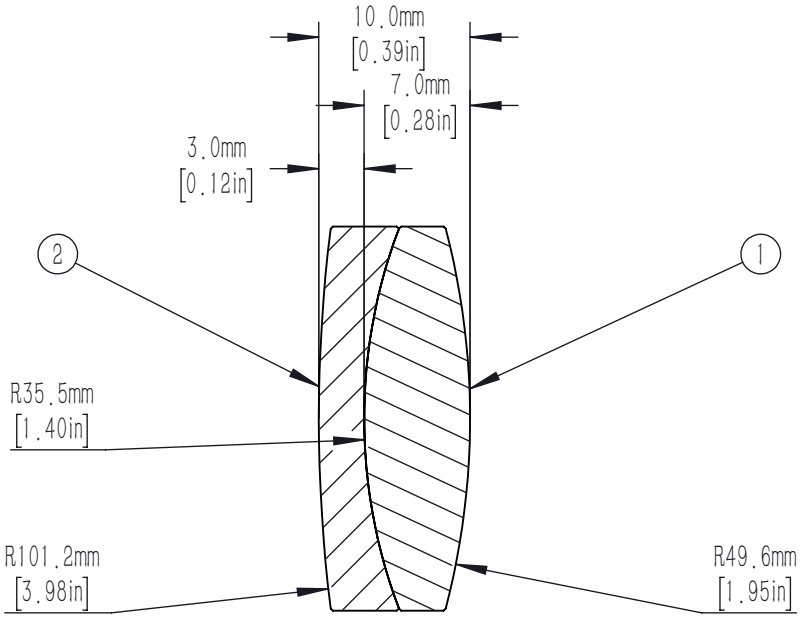

SECTION A-A

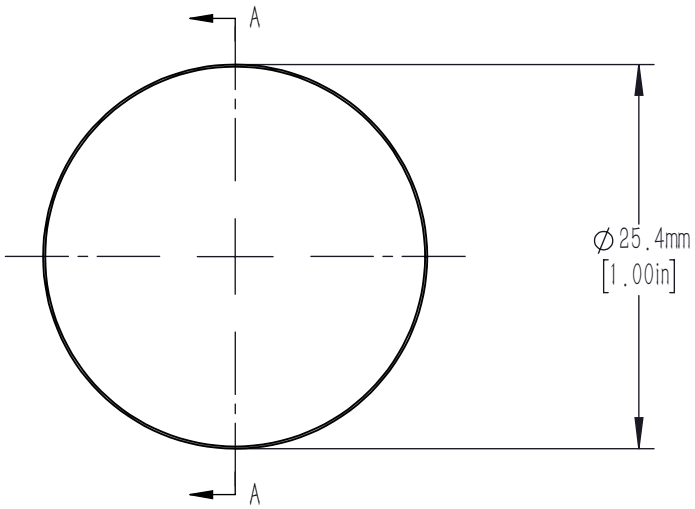

NOTES/SPECIFICATIONS:

1. DESIGN WAVELENGTHS: 486.1nm, 587.6nm, & 656.3nm
2. FOCAL LENGTH: f=80.0mm ±1% AT 587.6nm
3. BACK FOCAL LENGTH (REF): 75.26mm
4. CLEAR APERTURE > 22.86mm
5. SURFACE QUALITY: 40-20 SCRATCH-DIG
6. CENTRATION: <3arcmin
7. DIAMETER TOLERANCE: +0.0/-0.1mm
8. THICKNESS TOLERANCE: ±0.10mm
9. COATING: BBAR Ravg <0.5% FROM 400-700nm, 0 AOI, ON OUTER OPTICAL SURFACES

FOR INFORMATION ONLY
NOT FOR MANUFACTURING PURPOSES

DRAWING PROJECTION			睿创光科 RCOPTICS			
	NAME	DATE	D25.4mm, F=80.0.mm, Visible Achromat			
DRAWN	CWD	2022/5/18	AD254-80-A			
APPROVAL	ZSE	2022/5/18	MATERIAL	WEIGHT	SCALE	REV
FOR INFORMATION ONLYNOT FOR MANUFACTURING PURPOSES			SEE TABLE	0.01170Kg	2:1	A