	PART DESCRIPTION	MATERIAL
①	SM1RR	ANODIZED ALUMINUM
②	BFBX1254-50-C	N-BK7
③	SM1L8-A	ANODIZED ALUMINUM

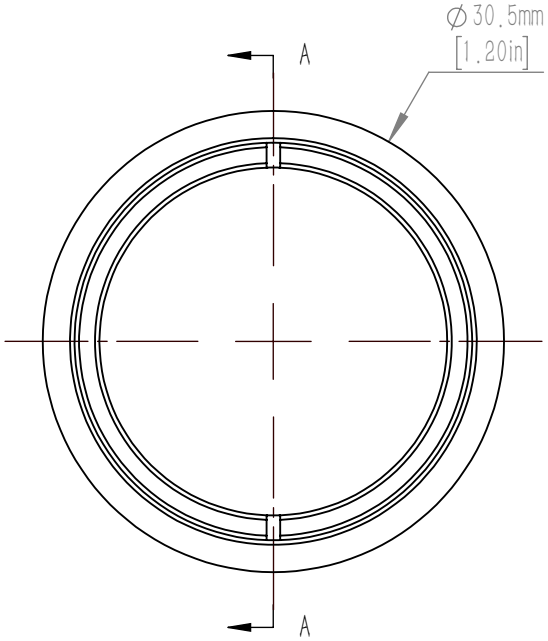

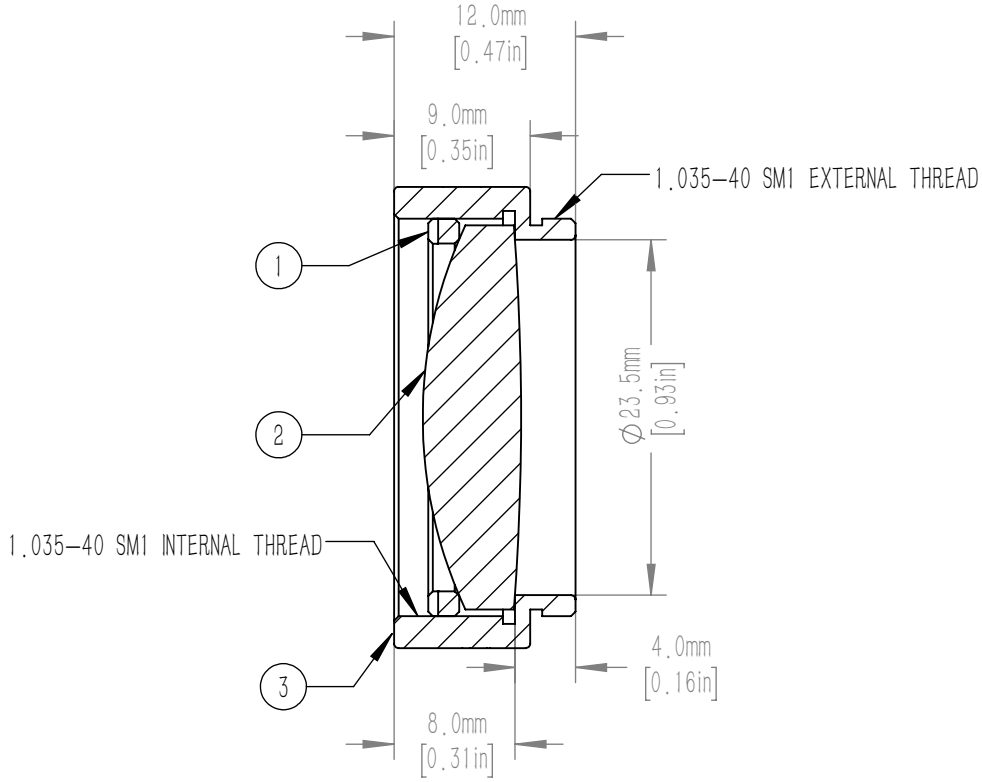

SECTION A-A

NOTES/SPECIFICATIONS:

1. DESIGN WAVELENGTHS: 587.6 nm
2. FOCAL LENGTH: 50.0 mm ±1%
3. BACK FOCAL LENGTH (REF): 46.4 mm
4. LENS DIAMETER: 25.4 mm +0.00/-0.10 mm
5. CLEAR APERTURE: >90% OF LENS DIAMETER
6. SURFACE QUALITY: 20-10 SCRATCH-DIG
7. CENTRATION: <3 arcmin
8. DIFFRACTION LIMITED DIAMETER @632.8 nm: 6.0 mm
9. DIFFRACTION LIMITED DIAMETER @1064 nm: 7.0 mm
10. COATING:BBAR Ravg<0.5% FROM 1050-1700 nm, 0° AOI, ON OUTER OPTICAL SURFACES

FOR INFORMATION ONLY NOT FOR MANUFACTURING PURPOSES

DRAWING PROJECTION			睿创光科 RCOPTICS			
	NAME	DATE	Mounted D25.4, F=50.0, N-BK7, C Coated, Best Form Lens			
DRAWN	CWD	2022/5/18	BFBX1254-50-C-ML			
APPROVAL	ZSB	2022/5/18	MATERIAL	WEIGHT	SCALE	REV
FOR INFORMATION ONLYNOT FOR MANUFACTURING PURPOSES			SEE TABLE	0.00992kg	2:1	A